sisco

SISCO-RK100-01G
Wind Speed Sensor User Manual



User Notice

Please read this manual carefully before use to ensure safe and optimal operation. Retain this manual for future reference.

Pre-Use Instructions

- Carefully review this manual and follow all operational and safety guidelines to prevent malfunctions and hazards.

Unpacking Inspection

- Upon receipt, carefully inspect the sensor device and accessories for any shipping damage.
- If damage is detected:
- Immediately notify the manufacturer and distributor.
- Retain all packaging materials for return or replacement processing.

Parts List

Item	Quantity	Remarks
Wind speed sensor	1	
Cable	1	The length depends on the order
Mounting screw	1	Set

1. Product Introduction

The ATO-RK100-01G wind speed sensor utilizes precision die-cast aluminum alloy technology, with small dimensional tolerances,high surface accuracy, built-in high-performance circuits, exceptional strength,outstanding weather resistance, superior corrosion resistance, and excellent waterproof performance. This sensor is widely used in applications requiring wind speed measurement, such as solar farms, meteorology, maritime vessels, docks, tower cranes, ports, agriculture, etc.

2. Product Features

- Easy to carry and install
- High measurement accuracy and good stability
- IP65 protection class
- Strong anti-electromagnetic interference ability
- Aluminum alloy material is light in weight and high in strength
- Unique internal treatment, strong anti-vibration ability

3. Specifications

Item	Technical Specification	
Supply Voltage	12-24VDC	5-24VDC
Output	4-20mA,RS485	Pulse (Pulse high level depends on the supply voltage)
Range	0-30m/s,0-50m/s,0-60m/s	
Starting Threshold	0.2m/s	
Limit Wind Speed	70m/s	
Accuracy	±(0.3+0.03V)m/s	
Resolution	0.1m/s	
Response Time	<1s	
Power Consumption	20mA@12VDC	
Ingress Protection	IP65	
Operating Temperature	-30℃-+70℃	
Main Material	Aluminum alloy	
Connector	M12 waterproof connector	
Finish	Polyester powder electrostatic spraying(Black)	
Weight(Unpacked)	410g(Excluding wires)	
Storage Condition	10℃-60℃@20%-90%RH	

4. Electrical Connections

Connector(Cable)	Pulses/Current/Voltage	RS485
Red	V+	V+
Black	V-	V-
Green	Signal+	RS485A
White		RS485B
Yellow	Shielded wire	Shielded wire

5. Output Types & Formulas

Pulses Type	0.5+0.169*F	
Current Type	Range:0-30m/s	V=(I-4)/(20-4)*30
	Range:0-60m/s	V=(I-4)/(20-4)*60
Voltage Type	Range:0-30m/s	V=U/(full scale voltage-zero point voltage)*30
	Range:0-60m/s	V=U/(full scale voltage-zero point voltage)*60

F: Number of pulses within 1 second;

V: Wind speed data in m/s;

U: Transmitter output voltage in V;

I: Transmitter output current in mA.

6. Product Dimensions

Unit:mm

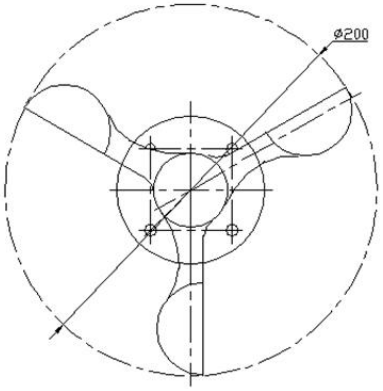

Figure 6.1
Top View with Dimensional Details

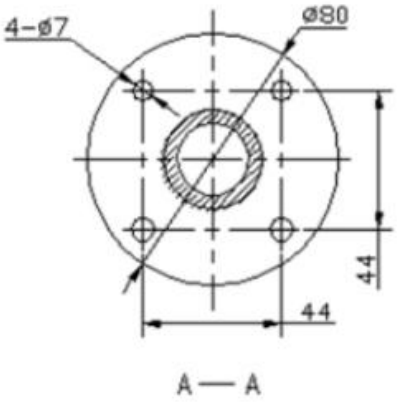

Figure 6.2
Bottom View with Dimensional Details

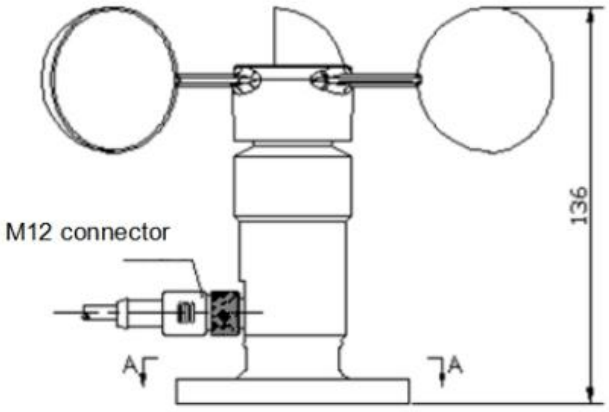

Figure 6.3
Side View with Height Dimensions

7. Communication Protocol(MODBUS-RTU)

Parameter	Value
Data Bits	8 bits
Check Bit	None
Stop Bit	1 bit
Baud Rate	9600 bps
Slave Address	0x01 (Factory Default)

7.1 Read Real-time Data

Client sends:

01 03 00 00 00 01 840A

Return:

01 03 02 00 2E 3858

7.1.1 Description of Return Data Format

No.	Conception	Byte Number	Description	Remarks
1	Address block	1	Address(0x01)	0x01
2	Function code	1	Only read(0x03)	0x03
3	Number of bytes	1	0X02	2bytes
4	Data block	2	Wind speed data	0x002E(4.6m/s)
5	Check block	2		0x38 0x58

7.2 Modify Slave Address

Client sends:（Change slave address from 01H to 02H.）

Slave id	Function code	Address_H	Address_L	New id_H	New id_L	CRC_L	CRC_H
0x01	0x06	0x00	0x02	0x00	0x02	0xA9	0xCB

Response:

Slave id	Function code	Address_H	Address_L	New id_H	New id_L	CRC_L	CRC_H
0x01	0x06	0x00	0x02	0x00	0x02	0xA9	0xCB

Note: If you forget the original address, you should use the broadcast address(FEH) (ensure that no other devices on the bus at this time).

8. Precautions

Package and Model Verification

- Ensure the packaging is intact and verify the sensor model and specifications match your purchased product.

Powered Wiring Prohibition

- Do not connect wires while powered. Only energize the sensor after confirming correct wiring.

Component Modification Restriction

- Do not alter factory-soldered components or pre-connected wires.

Precision Handling Requirement

The sensor is a precision device. Avoid:

- Unauthorized disassembly
- Structural components are strictly prohibited from being compressed under stress

Note: Unauthorized modifications void the warranty.

9. Troubleshooting

Incorrect Output Signals (Analog/RS232/RS485):

- Verify wiring correctness and secure connections.
- Check if the serial port is occupied or malfunctioning.
- Confirm serial port settings (baud rate, data/stop bits) match device requirements.

Persistent Issues:

- Contact the manufacturer if the above steps fail to resolve the problem.

10. Product Maintenance

Maintenance and Safety

- Regularly clean and inspect the sensor to maintain performance.
- Do not expose the sensor to extreme temperatures, moisture, or corrosive substances unless explicitly specified.
- Unauthorized disassembly, modification, or repairs may void the warranty and lead to malfunctions.

Troubleshooting Protocol

- In case of malfunction, refer to the troubleshooting section of this manual.
- Do not attempt unauthorized disassembly or repairs.
- Contact the manufacturer's after-sales department directly for technical support.

11. Warranty Terms

This product comes with a one-year warranty, starting from the date of delivery. Within twelve months, the Company shall be responsible for free repair or replacement of any failure caused by sensor quality issues (non-human damage). Fees will be charged for repairs or replacements after the warranty period expires.