sisco

UV Transmitter (RS485)

Chapter 1 Product Overview

1.1 Product Overview

This product is based on the principle that the photosensitive element converts ultraviolet rays into measurable electrical signals, realizing online monitoring of ultraviolet rays. The circuit adopts industrial-grade microprocessor chip and imported high-precision ultraviolet sensor to ensure the excellent reliability and high precision of the product. The product integrates temperature and humidity sensors into one, and the measurement data is more comprehensive. The product outputs 485 signals (standard ModBus-RTU protocol), up to 2000 meters of communication, support for secondary development. The product shell is wall-mounted high protection level shell, protection level IP65, rain and snow.

This product can be widely used in environmental monitoring, meteorological monitoring, agriculture, forestry and other environments. Measure the ultraviolet rays in the atmosphere and in the environment such as artificial light sources.

1.2 Functional Characteristics

- Issues such as the use of 240-370 nm sensitive UV measurement device, accurate measurement of UV intensity.
- The agenda item adopts high quality light transmittance material, the UV transmittance rate is more than 98%, which avoids the problem of low UV measurement value due to the absorption of UV by traditional PMMA and PC materials.
- The agenda item adopts 485 communication interface, standard ModBus-RTU communication protocol, communication address and baud rate can be set, the farthest communication distance 2000 meters.
- Issues: Wall-mounted waterproof shell, high protection level, can be used for long-term outdoor rain and snow environment.
- Issues 10-30V DC wide voltage supply.

1.3 Main Parameters

DC power supply (default)	10-30VDC	
Maximum Power Consumption	0.1W	
Typical Accuracy UV intensity range Resolution	UV intensity	±10% FS (@365nm,60%RH,25℃)
	Humidity	±3%RH(60%RH,25℃)
	Temperature	±0.5℃（25℃)
UV index range Measurement wavelength range	0~15 mW/ cm^2	
	0~ 450 uW/ cm^2	
Temperature and humidity range (optional) Circuit operating temperature and humidity	0.01 mW/ cm^2 (range 0~15 mW/ cm^2)	
	1uW/ cm^2 (range 0-450 uW/ cm^2)	
Long-term stability	0-15 (UV intensity range 0~ 450 uW/ cm^2 type without this parameter)	
Response time	Wavelength 240-370 nm	
Output Signal	-40℃~ +80℃，0%RH~100%RH	
DC power supply (default)	-40℃~+60℃，0%RH~80%RH	
Maximum Power Consumption Typical Accuracy	Temperature	≤0.1℃/y
	Humidity	≤1%/y
UV intensity range Resolution UV index range Measurement wavelength range	Temperature	≤18s(1m/s air velocity)
	Humidity	≤6s(1m/s air velocity)
	UV Intensity	0.2s
	UV Index	0.2s
Temperature and humidity range (optional)	485 (ModBus-RTU protocol)	

Despite the high reliability of this product, we recommend checking that the device functions properly and that the parameters are up to standard before use to ensure that it does not interfere with on-site use.

Overall Dimension: 110× 85× 44mm

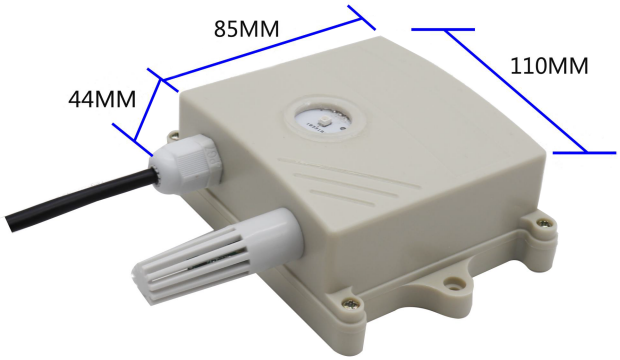

1.4 System Framework Diagram

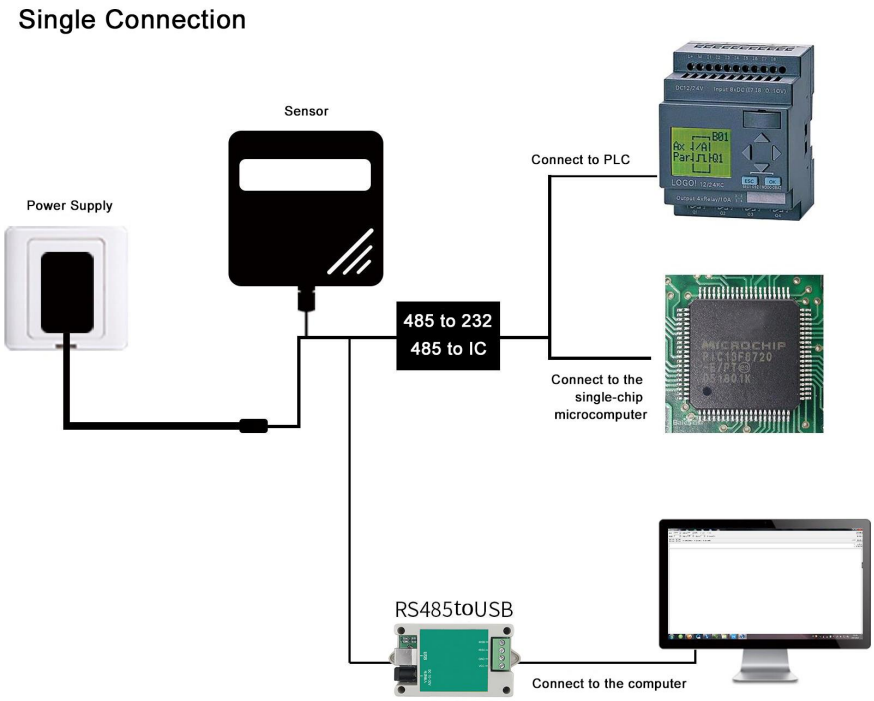

This product can also be a combination of multiple sensors in a 485 bus, theoretically a bus can be connected to 254 485 sensors, the other end of the access with a 485 interface PLC, through the 485 interface chip connected to the microcontroller, or the use of USB to 485 can be connected to the computer, the use of my company to provide the sensor configuration tool for the configuration and testing (in the use of the configuration software can only be used) (only one device can be connected when using the configuration software).

Multiple Connections

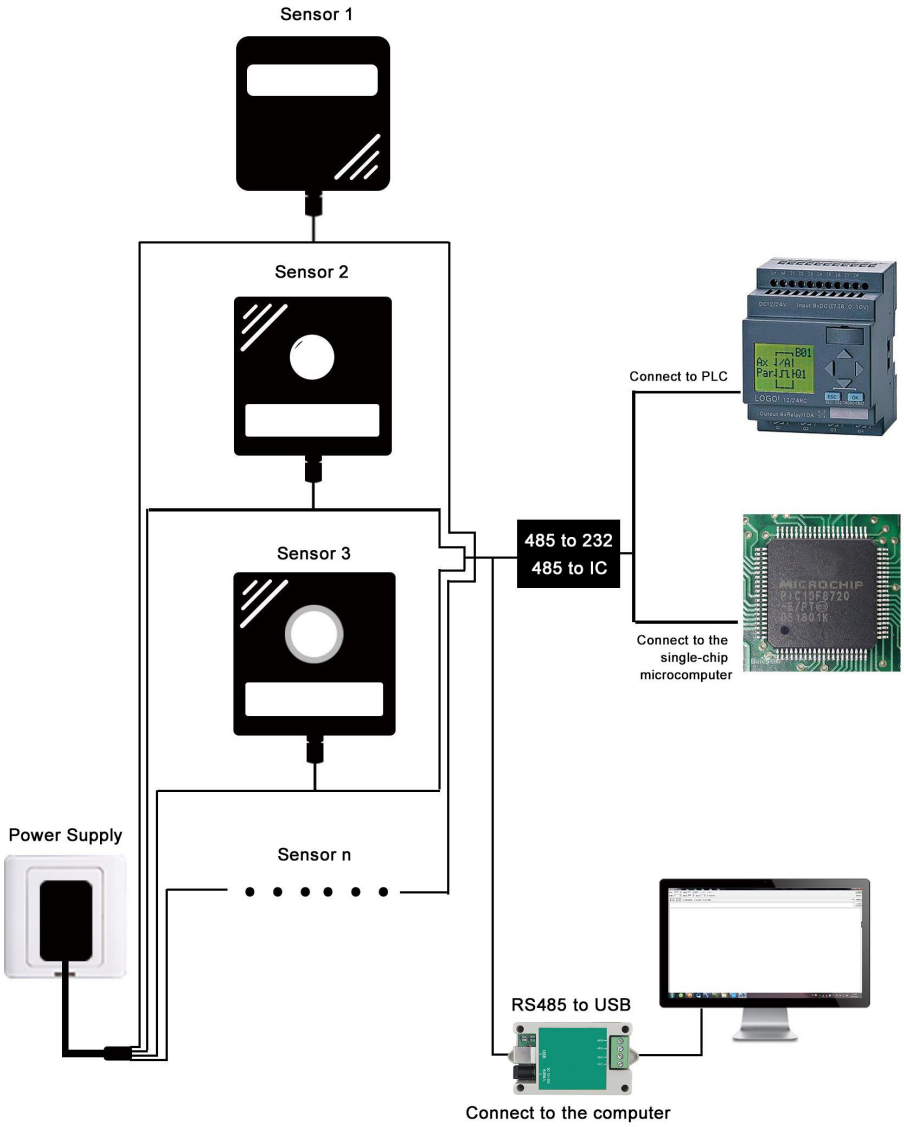

Chapter 2 Hardware Connections

2.1 Pre-installation Inspection of Equipment

Equipment list:

- Transmitter device 1 set
- Self-tapping screws (2), expansion plugs (2)
- Warranty card, certificate of conformity

2.2 Interface Description

Wide voltage power supply input 10~30V is available. 485 signal line wiring, pay attention to the A/B two lines can not be reversed, the address of multiple devices on the bus can not conflict.

2.2.1 Sensor Wiring

	Thread Color	Description
Power	Brown	Power positive (10~30V DC)
	Black	Power negative
Communication	Yellow	485-A
	Blue	485-B

2.3 Installation Methods

Special Note: This unit should be installed so that the sensor's light-sensitive surface is perpendicular to the light source.

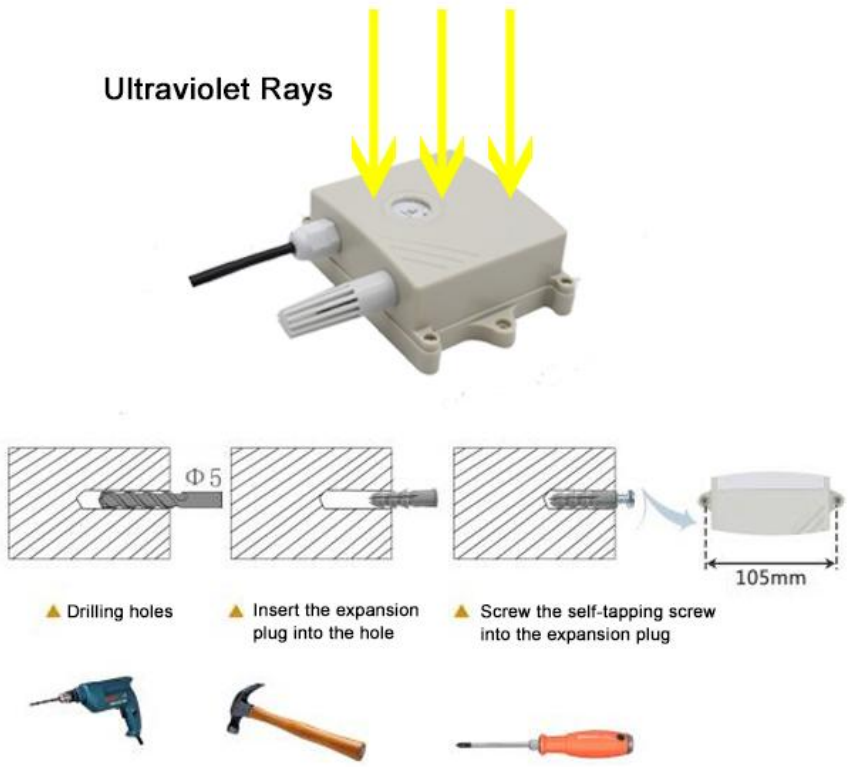

Chapter 3

Configuring Software Installation and Use

We provide matching "485 parameter configuration software", you can easily use the computer to read the parameters of the sensor, and at the same time, flexible modification of the sensor's device ID and address.

Note that when using the software to obtain automatically, you need to ensure that there is only one sensor on the 485 bus.

3.1 Sensor Access to Computer

After connecting the sensor to the computer via USB to 485 and supplying power, you can see the correct COM port on the computer ("My Computer - Properties - Device Manager - Ports" for COM ports).).

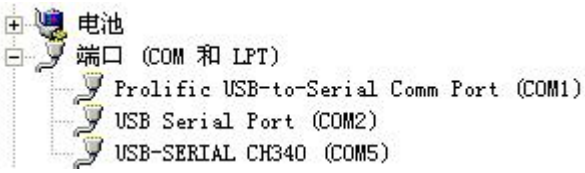

Open the package, select "Commissioning Software" --- "485 Parameter

Configuration Software”, find the

Just open it.

If the COM port is not found in the Device Manager, it means that you do not have the USB to 485 driver installed (included in the kit) or the driver is not installed correctly, please contact your technician for assistance.

3.2 Use of Sensor Monitoring Software

① Configuration interface is shown in the figure, firstly, according to the method in chapter 3.1 to get the serial port number and select the correct serial port.

② Click the test baud rate of the software, the software will test the baud rate and address of the current device, the default baud rate is 4800bit/s and the default address is 0x01.

The default baud rate is 4800bit/s, and the default address is 0x01.

③ Modify the address and baud rate according to your needs, and at the same time, you can check the current functional status of the device.

④ If the test is not successful, please recheck the wiring of the device and the installation of the 485 driver.

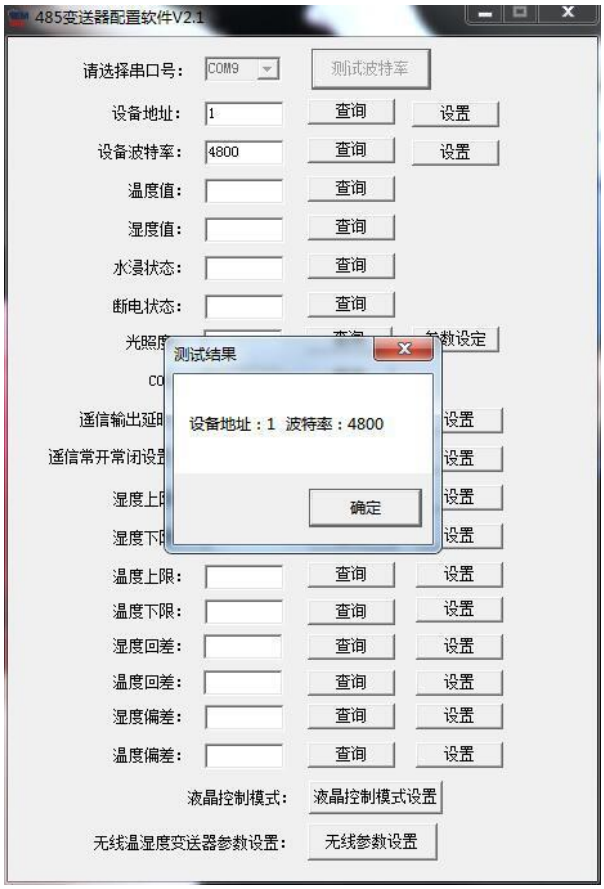

Chapter 4 Communication Protocols

4.1 Basic Parameters of Communication

Code	8-bit binary
Data Bits	8-bit
Parity Bit	no
Stop Bit	1-bit
Error Check	CRC (redundant cyclic code)
Baud Rate	2400bit/s, 4800bit/s, 9600 bit/s optional, factory default is 4800bit/s

4.2 Data Frame Format Definitions

The ModBus-RTU communication protocol is used in the following format:

Initial structure ⩾ 4 bytes of time

Address code = 1 byte

Function code = 1 byte

Data area = N bytes

Error check = 16 bit CRC code

End structure ⩾ 4 bytes of time

Address code: Address of the transmitter, unique in the communication network (factory default 0x01).

Function code: function indication of the command issued by the host, this transmitter only uses function code 0x03 (read register data).

Data area: data area is specific communication data, note that 16bits data high byte in front!

CRC code: two-byte check code.

The host asks for the frame structure:

Address Codes	Function Code	Register Starting Address	Register length	Check Digit Low Bit	Check Digit High Bit
1 byte	1 byte	2 bytes	2 bytes	1 byte	1 byte

Slave Response Frame Structure:

Address Codes	Function Code	Number of Valid Byte	Data Area I	Data Area II	Data Area N	Check Digit
1 byte	1 byte	1 byte	2 bytes	2 bytes	2 bytes	2 bytes

4.3 Register Addresses

Ultraviolet Equipment

Register Addresses	PLC or Configuration Address	Element	Operation	Definition Note
0000 H	40001	UV intensity	Read-only	When the range 0~15 mW/ cm2, the uploaded data is 100 times of the actual value.
				When range 0-450 uW/ cm2, the uploaded data is the actual value.
0001 H	40002	UV index	Read-only	Upload data as actual values
07D0 H	42001	Device address	Read-write	(1~254) Factory default 1
07D1H	42002	Device Baud Rate	Read-write	00 for 2400 01 for 4800 02 for 9600

Note: Devices with a range of 0-450 uW/ cm2 do not have the UV index as a register parameter.

4.4 Communication Protocol Examples and Explanations

4.4.1 Read the UV intensity Value at Device Address 0x01

Interrogation frame (single UV device reads register 00, triple device reads register 02)

Address Code	Function Code	Start Address	Data Length	Check Digit Low Bit	Check Digit High Bit
0x01	0x03	0x00 0x02	0x00 0x01	0x25	0xCA

Answer Frame (e.g., reads UV intensity of 5.26 mW/cm2)

Address Code	Function Code	Return the Number of Valid Byte	Data Area	Check Digit Low Bit	Check Digit High Bit
0x01	0x03	0x02	0x02 0x0E	0x38	0xE0

UV intensity:

020E (hex) = 526 => UV intensity = 5.26 mW/ cm2

4.4.2 Read the UV Index value at device address 0x01

Ask frame (single UV device reads register 01)

Address Code	Function Code	Start Address	Data Length	Check Digit Low Bit	Check Digit High Bit
0x01	0x03	0x00 0x03	0x00 0x01	0x74	0x0A

Answer frame (e.g. read UV index of 3)

Address Code	Function Code	Return the Number of Valid Byte	Data Area	Check Digit Low Bit	Check Digit High Bit
0x01	0x03	0x02	0x00 0x03	0xF8	0x45

UV index:

0003 (hex) = 3 => UV index = 3

4.4.3 Read the temperature and humidity value at device address 0x01

Ask frame Address Code	Function Code	Start Address	Data Length	Check Digit Low Bit	Check Digit High Bit
0x01	0x03	0x00 0x00	0x00 0x02	0xC4	0x0B

Answer frame (e.g. reads temperature -10.1° C, humidity 65.8% RH)

Address Code	Function Code	Number of Valid Bytes	Humidty Value	Temperature Value	Check Digit Low Bit	Check Digit High Bit
0x01	0x03	0x04	0x02 0x92	0xFF 0x9B	0x5A	0x3D

Temperature: uploaded as complementary code when the temperature is below 0° C

FF9B (hex) = -101 => temperature = -10.1° C

Humidity:

292 (hex) = 658 => Humidity = 65.8%RH

Chapter 5

Frequently Asked Questions and Solutions

No output or output error

Possible reasons:

① The computer has COM port and the selected port is not correct.

② The baud rate is wrong.

③ The 485 bus is disconnected, or the A and B lines are reversed.

④ The number of devices is too many or the wiring is too long, you should supply power nearby, add 485 enhancer, and increase 120Ω termination resistor at the same time.

⑤ USB to 485 driver is not installed or damaged.

⑥ The device is damaged.